ICC-ES Evaluation Report

ESR-5318

Reissued August 2025

Subject to renewal August 2026

This report also contains:

- **City of LA Supplement**
- **CA Supplement**

ICC-ES Evaluation Reports are not to be construed as representing aesthetics or any other attributes not specifically addressed, nor are they to be construed as an endorsement of the subject of the report or a recommendation for its use. There is no warranty by ICC Evaluation Service, LLC, express or implied, as to any finding or other matter in this report, or as to any product covered by the report.

Copyright © 2025 ICC Evaluation Service, LLC. All rights reserved.

DIVISION: 06 00 00—WOOD, PLASTICS, AND COMPOSITES Section: 06 12 00—Structural Panels	REPORT HOLDER: PREFLEX, INC	EVALUATION SUBJECT: STRUCTURAL INSULATED PANELS (SIPS)	

1.0 EVALUATION SCOPE

Compliance with the following codes:

- 2024, 2021, and 2018 *International Building Code®* (IBC)
- 2024, 2021, and 2018 *International Residential Code®* (IRC)

Property evaluated:

- Structural
- Fire Resistance
- Thermal Barrier

2.0 USES

2.1 General:

Structural Insulated Panels are used as structural insulated roof, floor and wall panels capable of resisting transverse, axial and in-plane shear loads.

2.2 Construction Types:

Structural Insulated Panels shall be considered combustible building elements when determining the construction type in accordance with IBC Chapter 6.

2.3 Fire Resistive Assemblies:

Structural Insulated Panels may be used as fire-resistance rated assemblies as described in Section 4.3.1, 4.3.2, and 4.3.3.

3.0 DESCRIPTION

3.1 General:

Structural Insulated Panels are a structural sandwich panel consisting of a light weight foam plastic core securely laminated between two thin rigid wood structural panel facings. The product is intended for use as load-bearing or non-load- bearing wall and roof panels. Structural Insulated Panels are available in $4^5/_8$-inch (117.5 mm) through 15-inch (381 mm) overall thicknesses and are custom-made to the specifications for each use. The maximum product size is 8 feet (2438 mm) in width and up to 24 feet (7315 mm) in length.

3.2 Materials:

3.2.1 Facing: The facing consists of two single-ply oriented strand board (OSB) facings a minimum of $^7/_{16}$-inch-thick (11.1 mm) conforming to the properties shown in Table 1. Additionally, facing materials shall

conform to DOC PS 2, Exposure 1, Rated Sheathing with a span index of 24/16. Panels may be manufactured with the facing strength axis oriented in either direction with respect to the direction of product bending provided the appropriate design values are used.

3.2.2 Core: The core material is EPS foam plastic insulation conforming to ASTM C578, Type I or ASTM C578 Type VIII. The foam core, up to 4-inch (101.6 mm) thickness, has a flame spread rating not exceeding 75 and a smoke-developed rating not exceeding 450 when tested in accordance with ASTM E84. Cores used in structural insulated panels up to 15 inches (381 mm) thick, comply with IBC Section 2603.3 Exception 4.

3.2.3 Adhesive: Facing materials are adhered to the core material using a thin-film adhesive. The adhesive is applied during the lamination process in accordance with the in-plant quality system documentation.

3.2.4 Material Sources: The facing, core and adhesive used in the construction of Structural Insulated Panels must be materials from approved sources as identified in the in-plant quality system documentation. A list of material suppliers is provided in Table 15.

3.2.5 Splines: Structural Insulated Panels are interconnected with surface splines, block splines, or I-joists (Figure 1). Connections using dimensional lumber splines or engineered structural splines not specifically addressed in this report must be designed in accordance with accepted engineering practice to meet applicable code requirements.

3.2.5.1 Surface Splines: Surface splines (Figure 1 and Figure 3) consist of 3-inch-wide (76.2 mm) by $^{7}/_{16}$-inch-thick (11.1 mm) or thicker OSB. At each panel joint, one surface spline is inserted into each of two tight-fitting slots in the core. The slots in the core are located just inside the facing. Diaphragm construction require surface splines in accordance with Section 4.1.9, Table 14 and Figure 3a.

3.2.5.2 Block Splines: Block splines (Figure 1) are manufactured in the same manner as the SIP except with an overall thickness that is 1 inch (25.4 mm) less than the overall thickness of the panels to be joined.

3.2.5.3 I-Joist Splines: Structural capacities for prefabricated wood I-joists splines (Figure 1) shall be established and monitored in accordance with ASTM D5055 with properties equal to or greater than those shown in Table 2. The overall depth of the joist is 1 inch (25.4 mm) less than the overall thickness of the panels to be joined.

4.0 DESIGN AND INSTALLATION

4.1 Design:

4.1.1 Overall Structural System: The scope of this report is limited to the evaluation of the SIP component. Panel connections and other details related to incorporation of the product into the overall structural system of a building are beyond the scope of this report.

The seismic-force-resisting system of structures consisting of the panels as shear walls, in whole or in part, must be designed and detailed in accordance with IBC Sections 2305 and 2306.

4.1.2 Design Approval: Where required by the authority having jurisdiction, structures using Structural Insulated Panels shall be designed by a registered design professional. Construction documents, including engineering calculations and drawings providing floor plans, window details, door details and connector details, shall be submitted to the code official when application is made for a permit. The individual preparing such documents shall possess the necessary qualifications as required by the applicable code and the professional registration laws of the state where the construction is undertaken. Approved construction documents shall be available at all times on the jobsite during installation.

4.1.3 Design Loads: Design loads to be resisted by the product shall be as required under the applicable code. Loads on the panels shall not exceed the loads noted in this report. Where loading conditions result in superimposed stresses, the sum of the ratio of actual loads over allowable loads shall not exceed one. Calculations demonstrating that the loads applied are less than the allowable loads described in this report shall be submitted to the code official for approval.

4.1.4 Allowable Loads: Allowable axial, transverse and in-plane shear loads are provided in Tables 3 through 13. For loading conditions not specifically addressed herein, structural members designed in accordance with accepted engineering practice shall be provided to meet applicable code requirements.

4.1.5 Concentrated Loads: Axial loads shall be applied to the product through continuous members such as structural insulated roof or floor panels or repetitive members such as joists, trusses or rafters spaced at regular intervals of 24 inches (610 mm) on center or less. Such members shall be fastened to a cap plate or similar member to distribute the load to the product. For other loading conditions, reinforcement shall be provided. This reinforcement shall be designed in accordance with accepted engineering practice.

4.1.6 Eccentric and Side Loads: Axial loads shall be applied concentrically to the top of the product. Loads shall not be applied eccentrically or through framing attached to one side of the panel (such as balloon framing) except where additional engineering documentation is provided.

4.1.7 Openings: Openings in panels are permitted when the header depth is at least 12 inches (305 mm), and the interior of the opening is reinforced with minimum 0.42 SG lumber graded #2 around the perimeter, secured in place with not less than 0.131-inch x $2^1/_2$-inch (2.9 mm x 63.5 mm) nails, spaced 6 inches (152 mm) on center. The panels are not used to resist in-plane shear loads. SIP splines are not permitted within 6 inches of the end of the header and are not permitted within the header. Allowable loads for maximum header spans of 36 inches may be selected from Tables 8 and 10. Allowable loads for maximum header spans of 72 inches (1829 mm) may be selected from Tables 9 and 11. Openings in panels beyond the scope of this report shall be reinforced with wood or steel designed in accordance with accepted engineering practice to resist all loads applied to the opening as required by the adopted code. Details for door and window openings shall be provided to clarify the manner of supporting axial, transverse and/or in-plane shear loads at openings. Such details shall be subject to approval by the local authority having jurisdiction.

4.1.8 In-Plane Shear Design: Shear walls utilizing block or surface splines shall be sized to resist all code **required** wind and seismic loads without exceeding the allowable loads provided herein. Shear wall chords, hold-downs and connections to transfer shear forces between the wall and surrounding structure shall be designed in accordance with accepted engineering practice. Allowable strengths for SIP shear walls with structural splines along each panel edge shall be designed in accordance with accepted engineering practice and are subject to the limitations for wood sheathed shear walls.

4.1.8.1 Seismic Design Categories A, B, and C: Use of the shear wall configurations in Table 12 is limited to structures in Seismic Design Categories A, B and C. Where SIPs are used to resist seismic forces the following factors shall be used for design: Response Modification Coefficient, R = 2.0; System Overstrength Factor,
Ω_0 = 2.5; Deflection Amplification Factor, C_d = 2.0. The maximum panel height-to-width ratio shall be 2:1.

4.1.8.2 Seismic Design Categories D, E and F: SIPs may be used in seismic-force-resisting systems in both load bearing and non-load bearing conditions. SIPs constructed in accordance with Table 13 used in Seismic Design Categories C, D, E and F use the following seismic design parameters; R=6 ½, Ω_0=3 and C_d=4. Walls with aspect ratios higher than 2:1 may not contain any spline connections.

4.1.9 Horizontal Diaphragms: Horizontal diaphragms shall be sized to resist all code required wind and seismic loads without exceeding the allowable loads provided herein. Diaphragm chords and connections to transfer shear forces between the diaphragm and surrounding structure shall be designed in accordance with accepted engineering practice. The maximum diaphragm length-to-width ratio shall not exceed 3:1.

4.1.10 Combined Loads: Panels subjected to any combination of transverse, axial or in-plane shear loads shall be analyzed utilizing a straight-line interaction.

4.1.11 Panel Reinforcements: Allowable transverse loads for panels reinforced with I-joists meeting the minimum properties shown in Table 2 are presented in Table 6. Panels reinforced with I-joists have not been evaluated for use in wall applications. Panels reinforced with I-joist splines may be designed in accordance with accepted engineering practice.

4.2 Installation:

4.2.1 General: Structural Insulated Panels shall be fabricated, identified and erected in accordance with this report, the approved construction documents and the applicable codes. In the event of a conflict between the manufacturer's published installation instructions and this report, this report shall govern. Approved construction documents shall be available at all times on the jobsite during installation.

4.2.2 Splines: Structural Insulated Panels are interconnected at the panel edges through the use of a spline. The spline type may be of any configuration listed in Section 3.2.5 as required by the specific design. The spline shall be secured in place with not less than 0.131-inch x $2^1/_2$-inch (2.9 mm x 63.5 mm) nails, spaced 6 inches on center on both sides of the panel, or an approved equivalent fastener. All joints shall be sealed in accordance with the SIP manufacturer's installation instructions. Alternate spline connections may be required for panels subjected to in-plane shear forces. Such panels shall be interconnected exactly as required in Tables 12, 13 and 14 or as directed by the designer.

4.2.3 Plates: The top and bottom plates of the panels shall be dimensional or engineered lumber sized to match the core thickness of the panel. The plates shall be secured using not less than 0.131-inch x $2^1/_2$-inch (2.9 mm x 63.5 mm) nails, spaced 6 inches on center on both sides of the panel, or an approved equivalent fastener. A second top plate of $1^1/_8$-inch (29 mm) minimum thickness dimensional or engineered lumber with a specific gravity of 0.42 that is cut to the full thickness of the panel shall be secured to the first top plate using 0.131-inch x 3-inch (2.9 mm x 76 mm) nails or an approved equivalent fastener.

4.2.4 Cutting and Notching: No field cutting or routing of the panels shall be permitted except as shown on approved construction documents.

4.2.5 Protection from Decay: SIPs that rest on exterior foundation walls shall not be located within 8 inches of exposed earth. SIPs supported by concrete or masonry that is in direct contact with earth shall be protected from the concrete or masonry by a moisture barrier.

4.2.6 Protection from Termites: In areas subject to damage from termites, SIPs shall be protected from termites using an approved method. Panels shall not be installed below grade or in contact with earth.

4.2.7 Heat-Producing Fixtures: Heat-producing fixtures shall not be installed in the panels unless protected by a method approved by the code official or documented in test reports. This limitation shall not be interpreted to prohibit heat-producing elements with suitable protection.

4.2.8 Plumbing Installation Restrictions: Plumbing and waste lines may extend at right angles through the wall panels but are not permitted vertically within the core. Lines shall not interrupt splines or panel plates unless approved by a registered design professional.

4.2.9 Voids and Holes:

4.2.9.1 Voids in Core: In lieu of openings designed in accordance with Section 4.1.7, the following voids are permitted. Voids may be provided in the panel core during fabrication at predetermined locations only. Voids parallel to the panel span shall be limited to a single 1-inch-maximum-diameter (25.4 mm) hole. Such voids shall be spaced a minimum of 4 feet (1219 mm) on center measured perpendicular to the panel span. Two $^1/_2$-inch-diameter (12.7 mm) holes may be substituted for the single 1-inch hole provided they are maintained parallel and within 2 inches of each other. Voids perpendicular to the panel span shall be limited to a single 1-inch-maximum-diameter (25.4 mm) hole placed not closer than 16 inches (406 mm) from the support. Additional voids in the same direction shall be spaced not less than 28 inches (711 mm) on center.

4.2.9.2 Holes in Panels: Holes may be placed in panels during fabrication at predetermined locations only. Holes shall be limited to 4 inches by 4 inches (102 mm by 102 mm) square. The minimum distance between holes shall not be less than 4 feet (1219 mm) on center measured perpendicular to the panel span and 24 inches
(610 mm) on center measured parallel to the panel span. Not more than three holes shall be permitted in a single line parallel to the panel span. The holes may intersect voids permitted elsewhere in this report.

4.2.10 Panel Cladding:

4.2.10.1 Roof Covering: The roof covering, underlayment and flashing shall comply with the applicable codes. All roofing materials must be installed in accordance with the manufacturer's installation instructions. The use of roof coverings requiring the application of heat during installation shall be reviewed and approved by a registered design professional.

4.2.10.2 Exterior Wall Covering: Panels shall be covered on the exterior by a water-resistive barrier as required by the applicable code. The water-resistive barrier shall be attached with flashing in such a manner as to provide a continuous water-resistive barrier behind the exterior wall veneer. The exterior facing of the SIP wall shall be covered with weather protection as required by the adopted building code or other approved materials.

4.2.10.3 Thermal Barrier at Wall, Roof and Floor: The foam plastic core of the SIPs must be separated from the interior of the building by installing an approved thermal barrier on the interior face of the panels consisting of ½-inch (12.7 mm) gypsum wallboard or equivalent thermal barrier complying with and installed in accordance with IBC Section 2603.4 or IRC Section R316.4 as applicable.

4.3 Fire-Resistance Rated Assemblies:

4.3.1 One-hour Limited Load-Bearing Wall Assembly: SIPs with thicknesses of 4 $^5/_8$. 6 ½ , or 8 ¼ inches (114, 165, or 210 mm) are used to construct a one-hour fire-resistance rated wall assembly. The SIP core is recessed 1-1/2 inches (38 mm) from the bottom SIP edge and 1-1/2 inches (38 mm) from the top SIP edge. The recesses receive nominally 2-by spruce-pine-fir No. 2 or better lumber bottom and top plates with a depth to match the core thickness. The plates must be connected to the SIPs by fastening through the SIP OSB facing with 8d box nails spaced 6 inches (152 mm) on center, on each side of the SIP.

The SIP core is recessed on the vertical sides to receive surface or block splines in accordance with Section 3.2.5 of this report. The splines must be connected to the SIPs by fastening through the SIP OSB facing with 1 $^5/_8$-inch long (41.28 mm), Type W, self-piercing tapping screws (ASTM C1002) spaced 6 inches (152 mm) on center.

The SIPs must be covered with two layers of $^5/_8$-inch thick (15.9 mm) Type X gypsum wallboard, complying with ASTM C1396, on each side. Where the panels are exposed to the exterior, the exterior layers of gypsum boards must be $^5/_8$-inch thick (15.9 mm) Type X gypsum sheathing complying with ASTM C1396. The vertical joints of the first layer of gypsum board must be offset a minimum of 16 inches (406 mm) from the spline joint. The first layer of gypsum board must be fastened to the panel facing with 1 $^5/_8$-inch long (41.28 mm), Type W, self-piercing tapping screws complying with ASTM C1002, spaced 24 inches (610 mm) on center vertically and

16 inches (406 mm) on center horizontally. The second layer of gypsum board must be installed with 2-inch long (50.8 mm), Type W, self-piercing tapping screws complying with ASTM C1002, spaced 12 inches (305 mm) on center vertically in rows offset 12 inches (305 mm) from screws securing the first layer of gypsum board, and 16 inches (406 mm) on center horizontally, in rows offset 8 inches (203 mm) from screws securing the first layer of gypsum board. The vertical joints in the second layer of gypsum board must be offset a minimum of 16 inches (406 mm) from vertical joints of the first layer of gypsum board.

Exposed gypsum board joints must be covered with joint tape and joint compound. Exposed screw heads must be covered with joint compound in accordance with ASTM C840.

This fire-resistance-rated wall assembly is limited to the heights shown in Table 7. The maximum superimposed allowable axial compression load shall be no greater than the lesser of 1800 plf (26 kN/m) or 43% of the loads in Table 7.

4.3.2 One-hour Limited Load-Bearing Wall Assembly: SIPs in accordance with this report, with thickness of 6 ½ inch (165 mm) and up to 10 feet (3048 mm) tall are used to construct a one-hour fire-resistance rated wall assembly. The SIP core is recessed 1 ½ inches (38 mm) from the bottom and side SIP edge. The SIP core is recessed 3 inches (76 mm) from the top SIP edge. The recesses receive 2x6 #2 Hem-Fir lumber; single bottom plate, double top plate, and single lumber end plates and double lumber splines. The double lumber splines are attached to each other using 0.148 x 3.25 inch (4x83 mm) nails with 0.35 inch (9 mm) head diameters, 24 inches (609 mm) on center, staggered.

The first top plate is attached to the studs using (2) 0.148 x 3.25 inch (3.8x82.6 mm) nails with 0.35 inch (8.9 mm) head diameters. The second top plate is attached to the first top plate using 0.148 x 3.25 inch (3.8x82.6 mm) nails with 0.35 inch (8.9 mm) head diameters, 16 inches (406 mm) on center.

OSB facing is fastened to perimeter framing using 0.122 x 2.08 inch (3x53 mm) with 0.25 inch (6 mm) head diameter, 6 inch (152 mm) on center.

The SIPs must be covered with a single layer of 5/8 Type C gypsum on oriented vertically on both sides of the wall, secured with Phosphate Coated cupped head drywall nails 1 5/8 inch (41 mm) long, 8 inch (203 mm) on center along the perimeter and 12 inch (304 mm) on center through the field. The fastener heads and joints must be treated with joint compound and paper tape.

The wall assembly is limited to a maximum restricted superimposed load of 56% of the allowable capacity shown in Table 7.

4.3.3 One-hour Roof-Ceiling Assembly: SIP with thicknesses from 4 $^5/_8$ inches to 12 ¼ inches (114 mm to 286 mm) thick. Support beams must be a minimum of 4 ½ inches wide by 9 ½ inches deep (114 mm by 241 mm) and must be spaced in accordance with the IBC or IRC as applicable. The roof covering material must comply with the IBC. The roof construction must comply as a Class A, B, or C roof assembly. SIPs must be connected with double nominal 2-inch lumber splines installed in the recessed core and connected to the SIP by fastening through the OSB facing with 8d common nails spaced 6 inches (31.7 mm) on center. Double lumber splines are attached to each other using 12d nails applied in 2 rows, 10 inches on center. Each exposed SIP edge must be covered with nominally 2-inch wood blocking installed in the recessed core and connected to the SIP by fastening through the OSB facing with 8d common nails spaced 6 inches (152 mm) on center.

Two layers of minimum $^5/_8$ inch (15.9 mm) thick gypsum board complying with ASTM C1396 must be installed on the underside of the SIPs and wood beams. The gypsum board's long dimension must be installed perpendicular to the wood beams. The first layer must be connected using 1 ¼ inch long (31.7 mm), Type S, bugle head steel screws complying with ASTM C1002, spaced 8 inches (203 mm) on center along the joints and in rows spaced 16 inches (406 mm) on center in the field. The joints of the first layer of gypsum must be staggered from the joints of the SIPs. The second layer of gypsum board must be fastened using a 2 inch long (51 mm), bugle head. Type W, self-piercing steel screws complying with ASTM C1002, spaced 8 inches (204 mm) on center along the board edges and in rows 12 inches (305 mm) on center in the field. The joints of the gypsum board second layer must be staggered from the joints of the gypsum board first layer. The exposed gypsum board joints must be covered with paper tape and joint compound. Screw heads must be covered with joint compound in accordance with ASTM C840.

The roof-ceiling assembly is limited to a maximum transverse load of the lesser of 43 psf (2.06 kPa) or the loads in Table 3.

4.4 Special Inspection: Where SIP shear walls are installed in buildings in Seismic Design Categories C, D, E and F; Seismic Design Categories C, D_0, D_1, D_2 and E for townhouses under the IRC; or Seismic Design Categories D_0, D_1, D_2 and E for detached one- and two-family dwellings under the IRC, periodic inspections of the fastening and anchoring of the shear wall assembly withing the seismic-force-resisting system must be provided. Inspection must include connections of the assemblies to drag struts and hold-downs, in accordance with 2018 and 2015 IBC Section 1705.11.1 or 1705.12.2, 2012 IBC Section 1705.10.1 or 1705.11.2, 2009 IBC

Section 1706.2 or 1707.3, or 2006 IBC Section 1707.3, as applicable, unless these are exempted by IBC Section 1704.1.

5.0 CONDITIONS OF USE:

The Structural Insulated Panels described in this report comply with, or are a suitable alternative to what is specified in, those codes listed in Section 1.0 of this report, subject to the following conditions:

5.1 The SIPs are fabricated, identified, and erected in accordance with this report, the manufacturer's published installation instructions and the approved construction documents. If there is a conflict between this report and the manufacturer's instructions, the more restrictive governs.

5.2 This report applies only to the panel thicknesses specifically listed herein.

5.3 In-use panel heights/spans shall not exceed the values listed herein. Extrapolation beyond the values listed herein is not permitted.

5.4 Design loads to be resisted by the SIPs must be determined in accordance with the IBC or IRC, as applicable, and must not exceed the allowable loads noted in this report.

5.5 The panels are manufactured at the production facilities listed in Section 7.3 of this evaluation report under a quality-control program with inspections by ICC-ES.

5.6 Where the SIP panels are used as a shear wall assembly for buildings located in Seismic Design Category D, E, or F under the IBC, for townhouses in Seismic Design Categories C, D0, D1, D2 and E under the IRC; or for detached one-and two-family dwellings in Seismic Design Categories D0, D1, D2 and E under the IRC, and are either of different widths intended to be combined in the same wall line or are intended to be combined in the same wall line with other shear-resisting elements, applied lateral loads shall be proportioned based on relative stiffness.

5.7 Seismic-force-resisting systems consisting of SIP shear walls in whole or in part shall be designed and detailed in accordance with Sections 2305 and 2306 of the IBC by the registered design professional.

5.8 Calculations and details must be submitted to the code official showing how the lateral loads are transferred from the roof or floor diaphragm into the shear wall and from the shear wall to the foundation. These calculations and details must be signed and sealed by a registered design professional, when required by the statures of the jurisdiction in which the project is to be constructed.

5.9 When the SIP shear walls are used in buildings that are more than one story tall, calculations and details must be submitted to the code official showing the load path for the transfer of lateral and overturning forces from the upper-story shear walls to the foundation. These calculations and details must be signed and sealed by a registered design professional, when required by the statutes of the jurisdiction in which the project is to be constructed.

5.10 Shear walls constructed of SIPs, used in buildings in Seismic Design Categories C through F, must be subject to special inspection in accordance with Section 4.4.

6.0 EVIDENCE SUBMITTED

6.1 Data in accordance with ICC-ES AC04 Acceptance Criteria for Sandwich Panels Approved June 2019 (Editorially revised December 2020).

6.2 Reports of diaphragm tests of panels, conducted in accordance with ASTM E455.

6.3 Reports and analysis of cyclic shear wall testing in accordance with Appendix A of the ICC-ES Acceptance Criteria for Sandwich Panels (AC04) dated June 2019 (editorially revised December 2020).

6.4 Reports of tests conducted in accordance with ASTM E119.

6.5 Reports of tests conducted in accordance with NFPA 286.

7.0 IDENTIFICATION

7.1 Structural Insulation Panels are identified with the following information:

7.1.1 The ICC-ES Evaluation Report number (ESR-4689).

7.1.2 Project or batch number

7.2 The report holder's contact information is the following:

PREFLEX, INC
AMAPOLAS 19301, FRACC. PRADERAS DE LA MESA
SECCION VILLA FLORES, TIJUANA, BAJA CALIFORNIA 22225
MEXICO
www.preflexinc.com

TABLE 1—OSB FACING MINIMUM PROPERTIES

Thickness (in.)	Flatwise Stiffness (lb_f-in.^{2}/ft)		Flatwise Strength (lb_f-in./ft)		Tension (lb_f/ft)		Density (pcf)
	Along	Across	Along	Across	Along	Across	
7/16	54,700	27,100	950	870	6,800	6,500	35

For **SI:** 1 inch = 25.4 mm; 1 foot = 304.8 mm; 1 lbf = 4.448 N; 1 pcf = 0.006366 N/m^3; 1 lbf-in/ft = 370.833 N-mm/m; 1 lbf/ft = 14.59 N/m; 1 lb_f-in.^{2}/ft = 9419.167 N-mm/m

TABLE 2—MINIMUM I-JOIST PROPERTIES FOR USE AS REINFORCEMENTS[1]

Depth	Bending Stiffness EI	Moment Capacity M	Shear Capacity V	Coefficient of Shear Deflection K
(in.)	(lb_f-in.^{2}) x 10^6	(lb_f-ft)	(lb_f)	(lb_f) x 10^6
9.25	185	2715	1155	4.81
11.25	296	3410	1405	5.85
14	482	4270	1710	7.28

For **SI:** 1 inch = 25.4 mm; 1 foot = 304.8 mm; 1 lbf = 4.448 N; 1lbf-in.^{2} = 2870.962 N-mm

[1] Properties are based on certification in accordance with ASTM D5055 or equivalent.

TABLE 3—ALLOWABLE ROOF UNIFORM TRANSVERSE LOADS, BLOCKED BEARING, SHORT DURATION (PSF) [1, 4]

Panel Length (ft)	PANEL THICKNESS (inch)								
	$4^5/_8$			$6^1/_2$			$8^1/_4$		
	Deflection Limit[2]			Deflection Limit[2]			Deflection Limit[2]		
	L/180	L/240	L/360	L/180	L/240	L/360	L/180	L/240	L/360
8 WAB[3]	50	40	27	73	64	43	80	80	58
8	68	51	34	82	82	56	90	90	78
10	45	33	22	63	57	38	68	68	54
12	30	23	15	51	40	27	55	55	39
14	21	16	--	39	29	19	46	43	29
16	--	--	--	29	22	14	40	33	22
18	--	--	--	22	16	--	34	25	17
20	--	--	--	--	--	--	26	20	13
22	--	--	--	--	--	--	21	15	--
24	--	--	--	--	--	--	17	12	--

For **SI:** 1 inch = 25.4 mm; 1 foot = 304.8 mm; 1 psf = 47.88 Pa.

See Table 4 for notes.

TABLE 4—ALLOWABLE ROOF UNIFORM TRANSVERSE LOADS, BLOCKED BEARING, SHORT DURATION (PSF) [1, 4]

Panel Length (ft)	PANEL THICKNESS (inch)								
	$10^1/_4$			$12^1/_4$			15		
	Deflection Limit[2]			Deflection Limit[2]			Deflection Limit[2]		
	L/180	L/240	L/360	L/180	L/240	L/360	L/180	L/240	L/360
8 WAB[3]	88	88	75	93	96	96	108	108	108
8	98	98	98	107	107	107	121	121	121
10	73	73	73	79	79	79	87	87	87
12	59	59	54	63	63	63	68	68	68
14	49	49	41	52	52	52	56	56	56
16	42	42	31	44	44	41	47	47	47
18	37	36	24	39	39	32	41	41	41
20	32	29	19	34	34	26	36	36	36
22	29	23	15	31	31	21	33	33	29
24	25	19	12	28	26	17	29	29	24

For **SI:** 1 inch = 25.4 mm; 1 foot = 304.8 mm; 1 psf = 47.88 Pa.

[1] Table values assume a simply supported panel with $1^1/_2$ in. of continuous bearing on facing at supports with solid wood plates at bearing locations. Values do not include the dead weight of the panel.
[2] Deflection limit shall be selected by building designer based on the serviceability requirements of the structure and the requirements of adopted building code. Values are based on loads of short duration only and do not consider the effects of creep.
[3] Tabulated values are based on the strong-axis of the facing material oriented parallel to the direction of panel bending. WAB indicates weak-axis bending of the facing material; the strong-axis of the facing material is oriented perpendicular to the direction of panel bending.
[4] Permanent loads, such as dead load, shall not exceed 0.50 times the tabulated load.

TABLE 5—ALLOWABLE WALL UNIFORM TRANSVERSE LOADS (PSF) [1, 4]

Panel Length (ft)	PANEL THICKNESS (inch)								
	$4^5/_8$			$6^1/_2$			$8^1/_4$		
	Deflection Limit[2]			Deflection Limit[2]			Deflection Limit[2]		
	L/180	L/240	L/360	L/180	L/240	L/360	L/180	L/240	L/360
8 WAB[3]	62	50	35	55	49	42	49	49	49
8	66	56	39	63	63	56	62	62	62
10	52	43	30	55	55	48	57	56	55
12	37	30	21	48	46	40	51	50	49
14	23	17	12	40	38	33	46	44	42
16	--	--	--	32	30	25	40	38	36
18	--	--	--	25	21	17	35	32	29
20	--	--	--	17	13	9	29	26	22
24	--	--	--	--	--	--	18	14	9

For **SI:** 1 inch = 25.4 mm; 1 foot = 304.8 mm; 1 psf = 47.88 Pa.

[1] Table values represent wall panel capacities ($4^5/_8$-in., $6^1/_2$-in. and $8^1/_4$-in. thickness panels only) utilizing a zero bearing configuration (Figure 2).
[2] Deflection limit shall be selected by building designer based on the serviceability requirements of the structure and the requirements of adopted building code. Values are based on loads of short duration only and do not consider the effects of creep.
[3] Tabulated values are based on the strong-axis of the facing material oriented parallel to the direction of panel bending. WAB indicates weak-axis bending of the facing material; the strong-axis of the facing material is oriented perpendicular to the direction of panel bending.
[4] Permanent loads, such as dead load, shall not exceed 0.50 times the tabulated load.

TABLE 6—ALLOWABLE UNIFORM TRANSVERSE LOADS WITH I-JOIST REINFORCEMENTS (PSF) [1, 3, 4]

Panel Length (ft)	PANEL THICKNESS (inch)								
	10 1/4-in. SIP thickness			12 1/4-in. SIP thickness			15-in. SIP thickness		
	Deflection Limit[2]			Deflection Limit[2]			Deflection Limit[2]		
	L/180	L/240	L/360	L/180	L/240	L/360	L/180	L/240	L/360
8	115	115	115	124	124	124	123	123	123
10	92	92	92	99	99	99	98	98	98
12	76	76	76	82	82	82	82	82	82
14	65	65	65	71	71	71	70	70	70
16	57	57	57	62	62	62	61	61	61
18	51	51	44	55	55	55	54	54	54
20	46	46	33	49	49	48	48	48	48
22	41	38	25	45	45	37	44	44	44
24	36	30	20	41	41	29	41	41	41

For **SI:** 1 inch = 25.4 mm; 1 foot = 304.8 mm; 1 psf = 47.88 Pa.

[1] Values assume a simply supported panel with 1 1/2 in. of continuous bearing on facing at supports. Values do not include the dead weight of the panel.
[2] Deflection limit shall be selected by building designer based on the serviceability requirements of the structure and the requirements of adopted building code. Values are based on loads of short duration only and do not consider the effects of creep.
[3] Tabulated values are based on the strong-axis of the facing material oriented parallel to the direction of panel bending.
[4] Permanent loads, such as dead load, shall not exceed 0.50 times the tabulated load.

TABLE 7—ALLOWABLE AXIAL LOADS (PLF) [1,2,3,4]

Lateral Brace Spacing (ft)	PANEL THICKNESS (inch)		
	4 5/8	6 1/2	8 1/4
8 WAB[5]	2320	2470	2530
8	3630	4070	4240
10	3260	3890	4130
12	2810	3660	4000
14	--	3390	3830
16	--	3090	3640
18	--	2790	3430
20	--	--	3190

For **SI:** 1 inch = 25.4 mm; 1 foot = 304.8 mm; 1 PLF = 14.59 N/m.

[1] Permanent loads, such as dead load, shall not exceed 0.50 times the tabulated load.
[2] All values are for normal duration and may not be increased for other durations.
[3] Axial loads shall be applied concentrically to the top of the panel through repetitive members spaced not more than 24-in. on center. Such members shall be fastened to a rim board or similar member to distribute along the top of the SIP.
[4] The ends of both facings must bear on the supporting foundation or structure to achieve the tabulated axial loads.
[5] Tabulated values are based on the strong-axis of the facing material oriented parallel to the direction of panel bending. WAB indicates weak-axis bending of the facing material; the strong-axis of the facing material is oriented perpendicular to the direction of panel bending.
[6] For fire-resistance-rated wall assemblies, axial load limitations in Section 4.3 must be observed.
[7] For combined loading, the requirements in Section 4.1.10 must be applied.
[8] The maximum allowable axial load is limited to 71 percent of the reported allowable axial load when used in the shear walls in Table 13.

TABLE 8—ALLOWABLE UNIFORM TRANSVERSE LOADS FOR SIPS WITH OPENINGS, 36-IN. MAXIMUM SPAN (PSF) [1,4,5,6]

Panel Length (ft)	PANEL THICKNESS (inch)								
	$4^5/_8$			$6^1/_2$			$8^1/_4$		
	Deflection Limit[2]			Deflection Limit[2]			Deflection Limit[2]		
	L/180	L/240	L/360	L/180	L/240	L/360	L/180	L/240	L/360
8 WAB[3]	23	17	11	42	31	21	62	47	31
8	31	23	15	57	43	28	75	65	43
10	17	13	8	33	25	16	48	39	26
12	10	8	5	21	16	10	33	25	16
14	7	5	--	14	10	7	22	16	11
16	--	--	--	9	7	--	15	11	7
18	--	--	--	7	5	--	11	8	5
20	--	--	--	--	--	--	8	6	--

For **SI:** 1 inch = 25.4 mm; 1 foot = 304.8 mm; 1 psf = 47.88 Pa.

See Table 9 for notes.

TABLE 9—ALLOWABLE UNIFORM TRANSVERSE LOADS FOR SIPS WITH OPENINGS, 72-INCH MAXIMUM SPAN (PSF) [1,4,5,6]

Panel Length (ft)	PANEL THICKNESS (inch)								
	$4^5/_8$			$6^1/_2$			$8^1/_4$		
	Deflection Limit[2]			Deflection Limit[2]			Deflection Limit[2]		
	L/180	L/240	L/360	L/180	L/240	L/360	L/180	L/240	L/360
8 WAB[3]	16	12	8	29	23	15	39	36	24
8	23	17	11	37	33	22	49	49	34
10	12	9	6	24	19	12	31	29	19
12	7	5	--	15	11	7	21	18	12
14	5	--	--	10	7	5	16	12	8
16	--	--	--	7	5	--	11	8	5
18	--	--	--	5	--	--	8	6	--
20	--	--	--	--	--	--	6	--	--

For **SI:** 1 inch = 25.4 mm; 1 foot = 304.8 mm; 1 psf = 47.88 Pa.

[1] Table values represent wall panel capacities utilizing a zero bearing configuration (Figure 2). Construction shall be as described in Section 4.1.7 of this report.

[2] Deflection limit shall be selected by building designer based on the serviceability requirements of the structure and the requirements of adopted building code. Values are based on loads of short duration only and do not consider the effects of creep.

[3] Tabulated values are based on the strong-axis of the facing material oriented parallel to the direction of panel bending. WAB indicates weak-axis bending of the facing material; the strong-axis of the facing material is oriented perpendicular to the direction of panel bending.

[4] Permanent loads, such as dead load, shall not exceed 0.50 times the tabulated load.

[5] Tabulated values assume header depths ranging from 12-in. to 36-in.

[6] SIP splines are not permitted within 6-in. of the end of the header and are not permitted within the header.

TABLE 10—ALLOWABLE AXIAL LOADS FOR SIPS WITH OPENINGS, 36-IN. MAXIMUM SPAN (PLF) [1,2,3,4,6,7]

Lateral Brace Spacing (ft)	Panel Thickness (inch)		
	$4^5/_8$	$6^1/_2$	$8^1/_4$
8 WAB[5]	770	820	840
8	1210	1355	1410
10	1085	1295	1375
12	935	1220	1330
14	--	1130	1275
16	--	1030	1210
18	--	930	1140
20	--	--	1060

For **SI:** 1 inch = 25.4 mm; 1 foot = 304.8 mm; ; 1 plf = 14.59 N/m.

See Table 11 for notes.

TABLE 11—ALLOWABLE AXIAL LOADS FOR SIPS WITH OPENINGS, 72-IN. MAXIMUM SPAN (PLF) [1,2,3,4,6,7]

Lateral Brace Spacing (ft)	Panel Thickness (inch)		
	$4^5/_8$	$6^1/_2$	$8^1/_4$
8 WAB[5]	460	490	505
8	725	810	845
10	650	775	825
12	560	730	800
14	--	675	765
16	--	615	725
18	--	555	685
20	--	--	635

For **SI:** 1 inch = 25.4 mm; 1 foot = 304.8 mm; 1 plf = 14.59 N/m.

[1] Permanent loads, such as dead load, shall not exceed 0.50 times the tabulated load.
[2] All values are for normal duration and may not be increased for other durations.
[3] Axial loads shall be applied concentrically to the top of the panel through repetitive members spaced not more than 24-in. on center. Such members shall be fastened to a cap plate or similar member to distribute along the top of the SIP.
[4] The ends of both facings must bear on the supporting foundation or structure to achieve the tabulated axial loads.
[5] Tabulated values are based on the strong-axis of the facing material oriented parallel to the direction of panel bending. WAB indicates weak-axis bending of the facing material; the strong-axis of the facing material is oriented perpendicular to the direction of panel bending.
[6] Tabulated values assume header depths ranging from 12-in. to 36-in.
[7] SIP splines are not permitted within 6-in. of the end of the header and are not permitted within the header.

TABLE 12—ALLOWABLE IN-PLANE SHEAR STRENGTH (POUNDS PER FOOT) FOR SIP SHEAR WALLS (WIND AND SEISMIC LOADS IN SEISMIC DESIGN CATEGORIES A, B AND C) [1, 2]

Spline Type[3]	Minimum Nominal SIP Thickness (in.)	Minimum Facing Connections[2,4]			Shear Strength(plf)
		Chord[2]	Plate[2]	Spline[3]	
Block or Surface Spline	$4^5/_8$	0.131-in. x $2^1/_2$-in. nails, 6-in. on center	0.131-in. x $2^1/_2$-in. nails, 6-in. on center	0.131-in. x $2^1/_2$-in. nails, 6-in. on center	380
	$8^1/_4$	0.131-in. x $2^1/_2$-in. nails, 6-in. on center	0.131-in. x $2^1/_2$-in. nails, 6-in. on center	0.131-in. x $2^1/_2$-in. nails, 6-in. on center	400

For **SI:** 1 inch = 25.4 mm; 1 foot = 304.8 mm; 1 psf = 47.88 Pa.; 1 plf = 14.59 N/m.

[1] Maximum shear wall dimensions ratio shall not exceed 2:1 (height: width) for resisting wind or seismic loads.
[2] Chords, hold downs and connections to other structural elements must be designed by a registered design professional in accordance with accepted engineering practice.
[3] Spline type at interior panel-to-panel joints only. Solid chord members are required at each end of each shear wall segment.
[4] Required connections must be made on each side of the panel. Dimensional or engineered lumber shall have an equivalent specific gravity of 0.42 or greater.

TABLE 13—SHEAR WALLS FOR USE IN SEISMIC DESIGN CATEGORIES A, B, C, D, E AND F[3, 8, 9]

Spline Type	Minimum Nominal Thickness (in)	Aspect Ratio (H:W)	Minimum Facing Connections			Allowable Loads (plf)
			Sheathing to Chords	Sheathing to Top and Bottom	Sheathing to Splines	
[1,4,6,10] 23/32 inch OSB Surface or Block Spline	6 ½	1:1	0.113 x 2.375 inch nails, 2 inch on center, (2) rows ¾ and 2-1/4 inch edge distance	0.113 x 2.375 inch nails, 2 inch on center, (2) rows ¾ and 2-1/4 inch edge distance top plate and 3/8 inch and ¾ inch edge distance for bottom plate	0.113 x 2.375 inch nails, 2 inch on center, (2) rows 3/8 inch and ¾ inch edge distance	911
[2,5,7,11] 23/32 inch OSB Surface or Block Spline	6 ½	1:1, 2:1, 3.5:1	0.131 x 2.5 inch nails, 4 inch on center, ¾ inch edge distance.	0.131 x 2.5 inch nails, 4 inch on center, ¾ inch edge distance.	0.131 x 2.5 inch nails, 4 inch on center, ¾ inch edge distance.	803

[1]Maximum aspect ratio of 1:1.
[2]Maximum aspect ratio of 3.5:1. When the aspect ratio exceeds 2:1 the panel may not contain a spline joint.
[3]Hold downs and connections to other structural elements must be designed by a registered design professional in accordance with accepted engineering practice.
[4]Top plate consists of (2) 2x6 #2 Douglas Fir let-in framing stitched together using 0.148 x 3 inch nails 5 inch on center , two rows. Cap plate consist of (1) 1.125 x 6.375 inch OSB rim board attached to top plate using 0.131 x 3 inch nails, 6 inch on center, two rows. Bottom plate consists of (1) 2x6 #2 Douglas Fir let-in framing. Sill plate consists of (1) 2x8 #2 Douglas Fir attached to the bottom plate using 0.131 x 3 inch nails, 6 inch on center, two rows.
[5]Top and bottom plates consist of (1) 2x6 #2 Douglas Fir let-in framing with an additional cap or sill plate. Sill plate consists of (1) 2x8 #2 Douglas Fir attached to the bottom plate using 0.131 x 3 inch nails, 6 inch on center, two rows. Cap plate consist of (1) 1.125 x 6.375 inch OSB rim board attached to top plate using 0.131 x 3 inch nails, 6 inch on center, two rows.
[6] End post/Chords consist of 4x6 #1 Douglas Fir, attached to bottom plate using (3) 0.162 x 3.5 inch nails, toenailed through each chord into the bottom plate and fastened to the top plate using (6) 0.162 x 3.5 inch nails through the top plate into each chord.
[7] End post/Chords consist of (2) 2x6 #2 Douglas Fir stitched together using (2) rows of 0131 x 3 inch nails 6 inch on center. Chords shall be attached to bottom plate using (3) 0.162 x 3.5 inch nails, toenailed through each chord into the bottom plate and fastened to the top plate using (3) 0.162 x 3.5 inch nails through the top plate into each chord.
[8] The installation configuration is recognized for use as both load-bearing and non-load-bearing shearwalls in Seismic Design Categories A, B, C, D, E, and F with the seismic design coefficients of R=6.5; System Overstrength Factor, Ω_0=3.0; Deflection Amplification Factor, C_d=4.0.
[9]When used as load-bearing SIPs, the allowable axial load must be determined in accordance with Table 7 of this report.
[10]Figure 4 contains an illustration of the construction.
[11]Figure 5 contains an illustration of the construction.

TABLE 14—ALLOWABLE IN-PLANE SHEAR STRENGTH FOR HORIZONTAL DIAPHRAGMS SUBJECTED TO WIND OR SEISMIC LOADING

Minimum Nominal SIP Thickness (in.)	Minimum Connections			Shear Strength (plf)	Max. Aspect Ratio
	Surface Spline[1] (Figure 3b)	Boundary Support Element[2] (Figure 3c)	Supported Interior Spline[1,3] (Figure 3a)		
8-1/4	0.131-in. x $2^1/_2$-in. nails, 6-in. on center Top face only into spline $^7/_{16}$-in. x 3-in. OSB Surface Spline	0.131-in. x $2^1/_2$-in. nails, 6-in. on center into lumber, both faces of SIP. 10-in. length, 0.190-in. shank diameter, 0.255-in. thread o.d., 2.750-in. thread length, 0.625-in. head diameter SIP screw, 6-in. on center	0.131-in. x $2^1/_2$-in. nails, 6-in. on center Top face only into spline 10-in. length, 0.190-in. shank diameter, 0.255-in. thread o.d., 2.750-in. thread length, 0.625-in. head diameter SIP screw (per designer)	265	3:1
	0.131-in. x $2^1/_2$-in. nails, 4-in. on center Top face only into spline $^7/_{16}$-in. x 3-in. OSB Surface Spline	0.131-in. x $2^1/_2$-in. nails, 6-in. on center into lumber, both faces of SIP. 10-in. length, 0.190-in. shank diameter, 0.255-in. thread o.d., 2.750-in. thread length, 0.625-in. head diameter SIP screw, 4-in. on center	0.131-in. x $2^1/_2$-in. nails, 4-in. on center Top face only into spline 10-in. length, 0.190-in. shank diameter, 0.255-in. thread o.d., 2.750-in. thread length, 0.625-in. head diameter SIP screw (per designer)	330	3:1
	0.131-in. x $2^1/_2$-in. nails, 2-in. on center, two rows staggered $^3/_8$-in. Top face only into spline $^7/_{16}$-in. x 3-in. OSB Surface Spline	0.131-in. x $2^1/_2$-in. nails, 6-in. on center into lumber, both faces of SIP. 10-in. length, 0.190-in. shank diameter, 0.255-in. thread o.d., 2.750-in. thread length, 0.625-in. head diameter SIP screw, 3-in. on center	0.131-in. x $2^1/_2$-in. nails, 2-in. on center, two rows staggered $^3/_8$-in. Top face only into spline 10-in. length, 0.190-in. shank diameter, 0.255-in. thread o.d., 2.750-in. thread length, 0.625-in. head diameter SIP screw (per designer)	575	3:1

For **SI:** 1 inch = 25.4 mm, 1 PLF = 14.59 N/m

[1]Surface or block spline are used at interior panel-to-panel joints. Spline fasteners are applied through the top facing into the top spline facing. Where interior panels joints are supported by structural members, SIP screws, a minimum of 1-3/4 inch longer than the diaphragm thickness are applied through the top face of the SIP through the panel into the support beam (Figure 3a and 3b).

[2]Diaphragm boundaries shall use $1^1/_2$-inch-wide lumber minimum with a specific gravity of 0.42 or greater. Specified fasteners are required through both facings into the framing, with SIP screw through the thickness of the SIP into the supporting member as shown in Figure 3c.

[3]Location of interior support members and connections to those supports are the responsibility of the registered design professional and are not included with the shear strength capacities in this table.

TABLE 15—COMPONENT MATERIAL SOURCES

Facing	Core	Adhesive
Louisiana-Pacific Corporation Sagola, MI Distributed by: Viking Forest Products, LLC 7615 Smetana Lane Eden Prairie, MN 55344	Atlas Molded Products, A Division of Atlas Roofing Corporation 8240 Byron Center Road SW Byron Center, MI 49315	Bostik, Inc. 11320 W. Watertown Plank Road Wauwatosa, Wisconsin 53226
West Fraser 1 Toronto Street, Suite 600 Toronto ON, Canada M5C 2W4	Benchmark Foam, Inc. 401 Pheasant Ridge Drive Watertown, SD 57201	DuPont Specialty Products 200 Larkin Center 1501 Larkin Center Drive Midland, MI 48674
Tolko Industries, Ltd. 3203 30th Avenue Vernon BC, Canada V1T 6M1	Carpenter Foam 1021 E Springfield Road High Point, NC 27263	
	Creative Packaging Company 6301 Midland Industrial Drive Shelbyville, KY 40065	
	Harbor Foam 2950 Prairie St SW, Suite 300 Grandville, MI 49418	
	Insulfoam, a Carlisle Company 1507 Sunburst Lane Mead, NE 68041 (I-41)	
	Iowa EPS Products, Inc. 5554 N.E. 16th Street Des Moines, IA 50313	
	OPCO, Inc. P.O. Box 101 Latrobe, PA 15650	
	Plymouth Foam 1 Southern Gateway Drive Gnadenhutten, OH 44629	
	Polar Industries, Inc. 32 Gramar Avenue Prospect, CT 06712	
	Powerfoam Insulation Division of Metl-Span LTD. 550 Murray Street, Highway 287 Midlothian, TX 76065	
	Thermal Foams, Inc. 2101 Kenmore Avenue Buffalo, NY 14207	

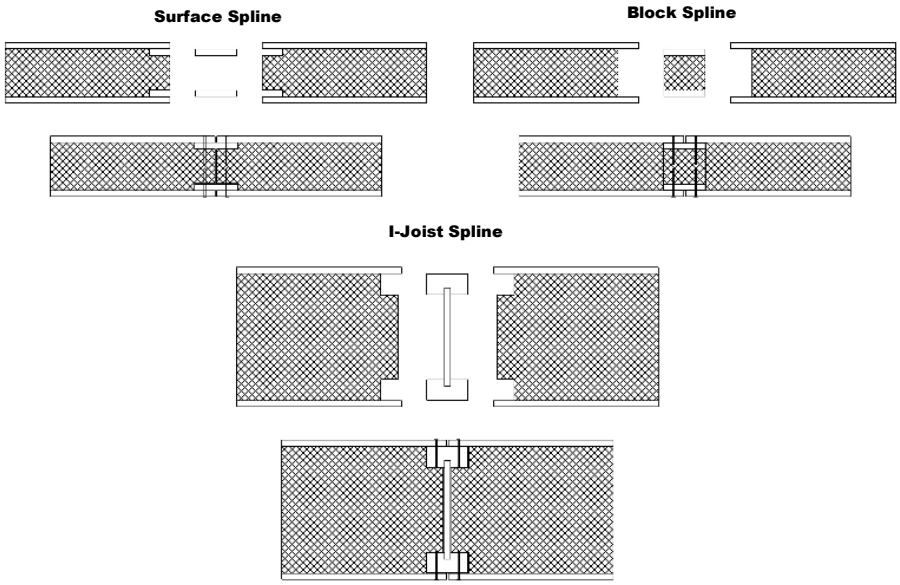

FIGURE 1—SIP SPLINE TYPES

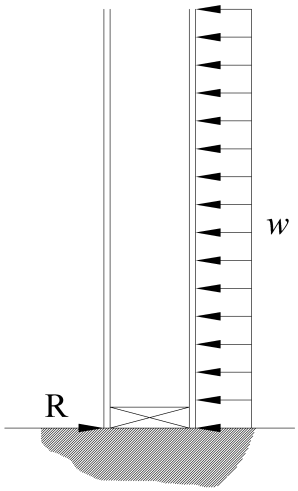

FIGURE 2—ZERO BEARING SUPPORT

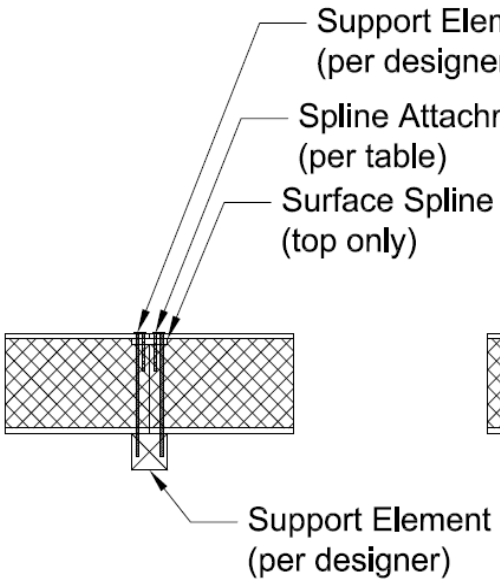

FIGURE 3A—INTERIOR SUPPORT SPLINE

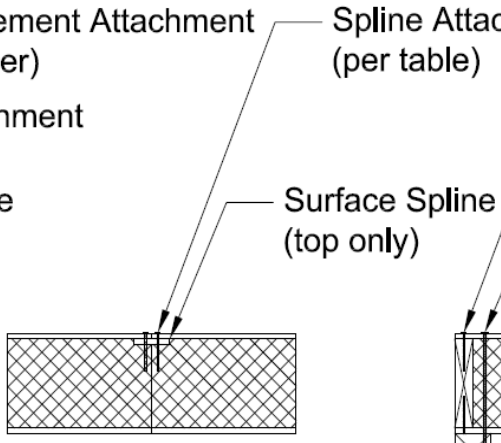

FIGURE 3B—SURFACE SPLINE

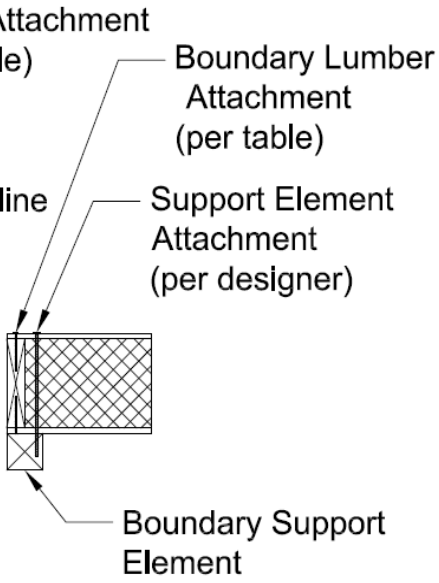

FIGURE 3C—BOUNDARY SUPPORT ELEMENT

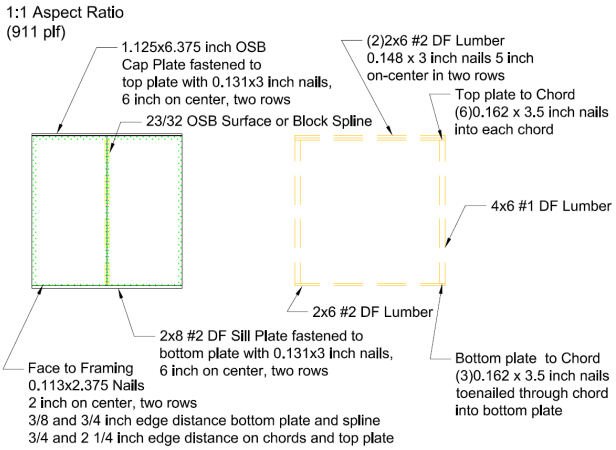

FIGURE 4—TABLE 13 SHEARWALL CONSTRUCTION (911 PLF)

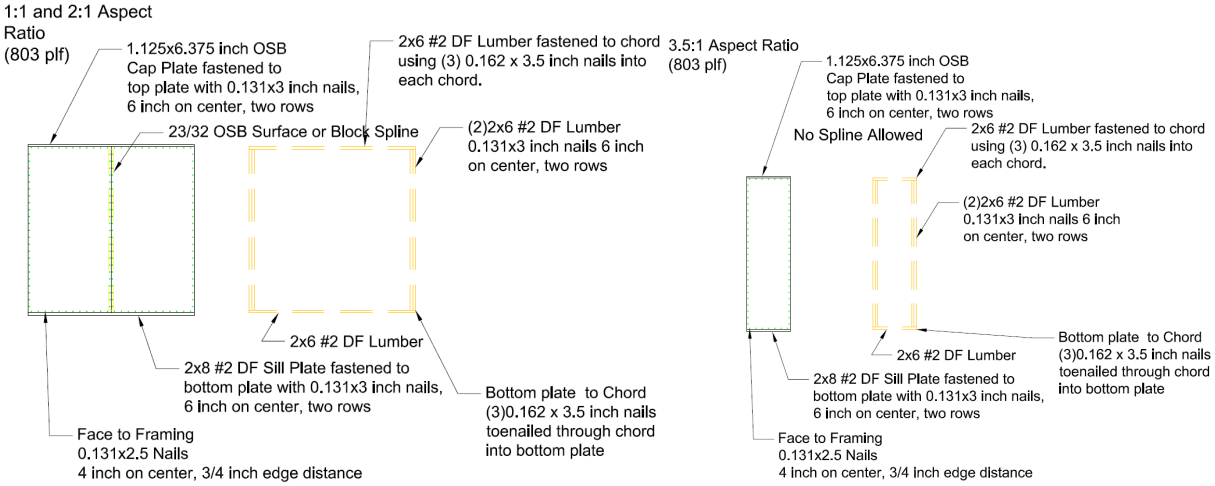

FIGURE 5—TABLE 13 SHEARWALL CONSTRUCTION (803 PLF)

DIVISION: 06 00 00—WOOD, PLASTICS AND COMPOSITES
Section: 06 12 00—Structural Panels

REPORT HOLDER:

PREFLEX

EVALUATION SUBJECT:

STRUCTURAL INSULATED PANELS (SIPS)

1.0 REPORT PURPOSE AND SCOPE

Purpose:

The purpose of this evaluation report supplement is to indicate that Structural Insulated Panels, described in ICC-ES evaluation report ESR-5318, have also been evaluated for compliance with the codes noted below as adopted by the Los Angeles Department of Building and Safety (LADBS).

Applicable code editions:

- 2023 *City of Los Angeles Building Code* (LABC)
- 2023 *City of Los Angeles Residential Code* (LARC)

2.0 CONCLUSIONS

The Structural Insulated Panels, described in Sections 2.0 through 7.0 of the evaluation report ESR-5318, complies/comply with the LABC Chapter 7, 23 and 26, and the LARC, and are subject to the conditions of use described in this supplement.

3.0 CONDITIONS OF USE

The Structural Insulated Panels described in this evaluation report supplement must comply with all of the following conditions:

- All applicable sections in the evaluation report ESR-5318.
- The design, installation, conditions of use and identification of the Structural Insulated Panels are in accordance with the 2021 *International Building Code*® (IBC) provisions noted in the evaluation report ESR-5318.
- The design, installation and inspection are in accordance with additional requirements of LABC Chapters 16 and 17, as applicable.
- Under the LARC, an engineered design in accordance with LARC Section R301.1.3 must be submitted.
- These Structural Insulated Panels may be used in the construction of new buildings located in and Fire Hazard Severity Zone within State Responsibility Areas or any Wildland-Urban Interface Fire Area, provided installation is in accordance with the 2021 International Building Code® (IBC) provisions noted in the evaluation report and the additional requirements of Sections 701A.3, 705A and 707A of the LABC, as applicable.
- Structural Insulated Panels may be used in the construction of new buildings located in any Fire Hazard Severity Zone within State Responsibility Areas or any Wildland-Urban Interface Fire Area, provided installation is in accordance with the 2021 International Residential Code® (IRC) provisions noted in the evaluation report and the additional requirements of Sections R337.1.3, R337.5 and R337.7 of the LARC, as applicable.

The products have not been evaluated for compliance with the International Wildland-Urban Interface Code®.

This supplement expires concurrently with the evaluation report, reissued August 2025.

ICC-ES Evaluation Reports are not to be construed as representing aesthetics or any other attributes not specifically addressed, nor are they to be construed as an endorsement of the subject of the report or a recommendation for its use. There is no warranty by ICC Evaluation Service, LLC, express or implied, as to any finding or other matter in this report, or as to any product covered by the report.

Copyright © 2025 ICC Evaluation Service, LLC. All rights reserved.

DIVISION: 06 00 00—WOOD, PLASTICS AND COMPOSITES
Section: 06 12 00—Structural Panels

REPORT HOLDER:

PREFLEX

EVALUATION SUBJECT:

STRUCTURAL INSULATED PANELS (SIPS)

1.0 REPORT PURPOSE AND SCOPE

Purpose:

The purpose of this evaluation report supplement is to indicate that Structural Insulated Panels, described in ICC-ES evaluation report ESR-5318, have also been evaluated for compliance with the code*(s)* noted below.

Applicable code edition(s):

- 2022 *California Building Code*® (CBC)

For evaluation of applicable Chapters adopted by the California Office of Statewide Health Planning and Development (OSHPD) AKA: California Department of Health Care Access and Information (HCAI) and the Division of State Architect (DSA), see Sections 2.1.1 and 2.1.2 below.

- 2022 *California Residential Building Code*® (CRC)

2.0 CONCLUSIONS

2.1 CBC:

The Structural Insulated Panels, described in Sections 2.0 through 7.0 of the evaluation report ESR-5318, comply with CBC Chapters 7, 16 and 26, provided the design and installation are in accordance with the 2021 *International Building Code*® (IBC) provisions noted in the evaluation report and the additional requirements of CBC Chapters 16 and 26, as applicable.

The use of the products in construction of new buildings located in any Fire Hazard Severity Zone within State Responsibility Areas or any Wildland–Urban Interface Area requires installation in accordance with the 2021 *International Building Code*® (IBC), provisions noted in the main report and the additional requirements of CBC Sections 701A.3, 705A and 707A, as applicable.

2.1.1 OSHPD:

The applicable OSHPD Sections and Chapters of the CBC are beyond the scope of this supplement.

2.1.2 DSA:

The applicable DSA Sections and Chapters of the CBC are beyond the scope of this supplement.

2.2 CRC:

The Structural Insulated Panels, described in Sections 2.0 through 7.0 of the evaluation report ESR-5318, comply with CRC Chapters R301 and R316, provided the design and installation are in accordance with the 2021 *International Residential Code*® (IRC) provisions noted in the evaluation report and the additional requirements of CRC Sections R301 and R316 as applicable.

The use of the products in construction of new buildings located in any Fire Hazard Severity Zone within State Responsibility Areas or any Wildland–Urban Interface Area requires installation in accordance with the 2021 *International Residential Code*® (IRC) provisions of the main report and the additional requirements of CRC Sections R337.1.3, R337.5 and R337.7, as applicable.

The products recognized in this supplement have not been evaluated for compliance with the *International Wildland–Urban Interface Code*®.

This supplement expires concurrently with the evaluation report, reissued August 2025.

ICC-ES Evaluation Reports are not to be construed as representing aesthetics or any other attributes not specifically addressed, nor are they to be construed as an endorsement of the subject of the report or a recommendation for its use. There is no warranty by ICC Evaluation Service, LLC, express or implied, as to any finding or other matter in this report, or as to any product covered by the report.

Copyright © 2025 ICC Evaluation Service, LLC. All rights reserved.